PDU Cables™

AIRGUARD® SURGGUARD epco BUSWAY

GT003RB





FEATURES:

- Double layered engineered sealing system - EPDM interlocking gasket
- Tool-free installation with an integrated adhesive strip, plus an optional screw-down mounting feature
- AirGuard frame manufactured from high strength flame retardant ABS
- Covers a 4" (102mm) circular cutout
- 2 1/2" (64mm) maxium cable size
- Overall dimensions 5 3/4"R (146mm)
- RoHS compliant - meets NECN code for cutouts

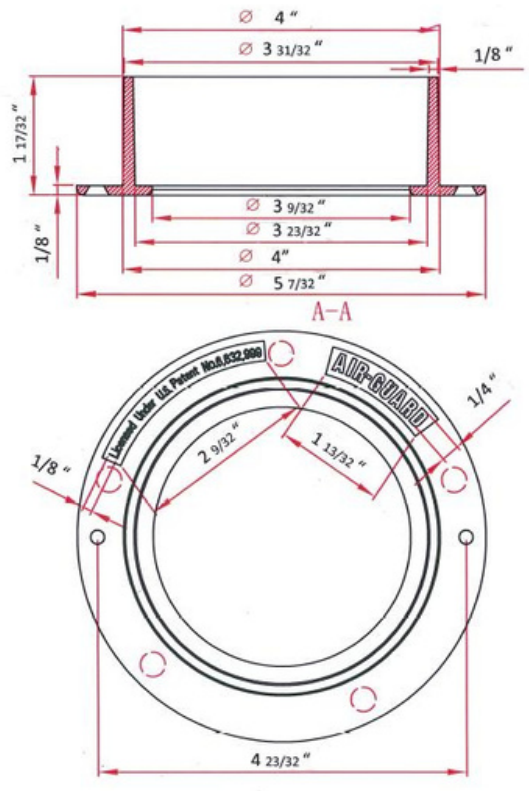

DATA CENTER BEST PRACTICES - SEALING AROUND CABLE OPENING:

- Reduces bypass airflow and static increases under floor pressure
- Increases cooling efficiences
- ROI (reduces energy costs by lowering CRAC demand)
- Hot Aisle / Cold Aisle best practice requires sealed cutouts